N2224E.M3

Cylindrical Roller Bearings (single row, with cage)

Details:

Main dimensions			
d [mm]	120	d_1 [mm]	≈ 153.9
D [mm]	215	$r_{1,2}$ [mm]	2.1
B [mm]	58	$r_{3,4}$ [mm]	2.1
Weight [kg]	≈ 9	s [mm]	5.8
E [mm]	195.5		

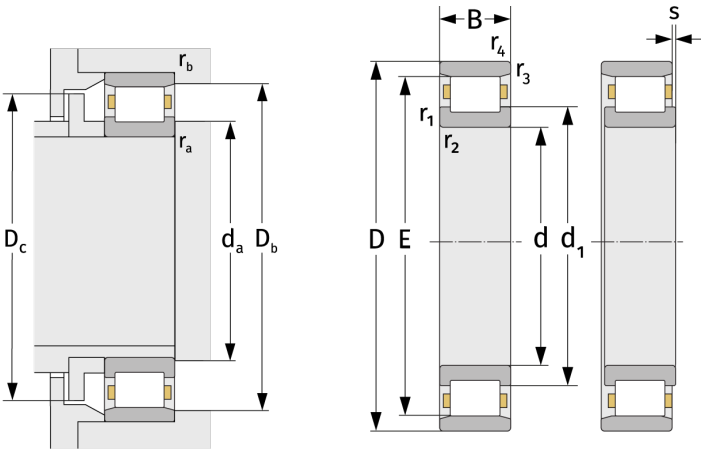

Mating dimensions		Calculation data	
$d_{a, min}$ [mm]	132	C [kN]	461
$D_{b, min}$ [mm]	198	C_0 [kN]	635
$D_{c, max}$ [mm]	193	C_u [kN]	74.1
$r_{a, max}$ [mm]	2.1	n_{th} [min^{-1}]	2504
$r_{b, max}$ [mm]	2.1	n_g [min^{-1}]	4200