N230E.M3

Cylindrical Roller Bearings (single row, with cage)

Details:

Main dimensions			
d [mm]	150	d_1 [mm]	≈ 194
D [mm]	270	$r_{1,2}$ [mm]	3
B [mm]	45	$r_{3,4}$ [mm]	3
Weight [kg]	≈ 11	s [mm]	3.2
E [mm]	242		

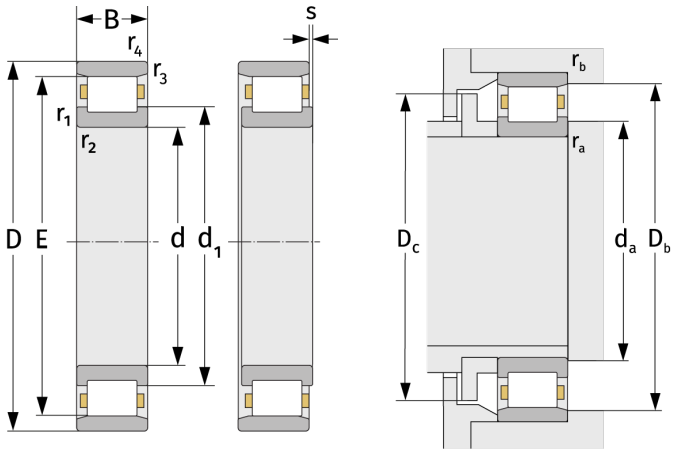

Mating dimensions		Calculation data	
$d_{a,\,min}$ [mm]	164	C [kN]	454
$D_{b,\,min}$ [mm]	245	C_0 [kN]	605
$D_{c,\,max}$ [mm]	240	C_u [kN]	66.2
$r_{a,\,max}$ [mm]	2.5	n_{th} [min^{-1}]	2363
$r_{b,\,max}$ [mm]	2.5	n_g [min^{-1}]	3400