N2314E.M3

Cylindrical Roller Bearings (single row, with cage)

Details:

Main dimensions			
d [mm]	70	d_1 [mm]	≈ 97.8
D [mm]	150	$r_{1,2}$ [mm]	2.1
B [mm]	51	$r_{3,4}$ [mm]	2.1
Weight [kg]	≈ 4	s [mm]	5.9
E [mm]	133		

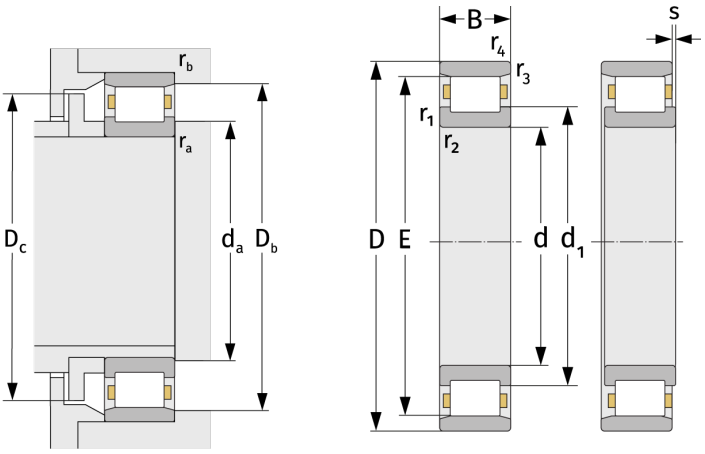

Mating dimensions		Calculation data	
$d_{a, min}$ [mm]	82	C [kN]	278
$D_{b, min}$ [mm]	135	C_0 [kN]	327
$D_{c, max}$ [mm]	130	C_u [kN]	43.2
$r_{a, max}$ [mm]	2.1	n_{th} [min^{-1}]	3838
$r_{b, max}$ [mm]	2.1	n_g [min^{-1}]	6600