N2344E.M3

Cylindrical Roller Bearings (single row, with cage)

Details:

Main dimensions			
d [mm]	220	d_1 [mm]	≈ 304.6
D [mm]	460	$r_{1,2}$ [mm]	5
B [mm]	145	$r_{3,4}$ [mm]	5
Weight [kg]	≈ 121	s [mm]	10
E [mm]	407		

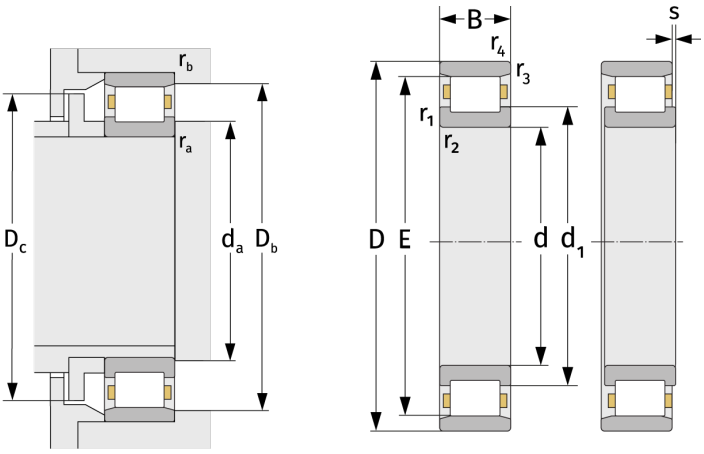

Mating dimensions		Calculation data	
$d_{a, min}$ [mm]	240	C [kN]	2250
$D_{b, min}$ [mm]	410	C_0 [kN]	3260
$D_{c, max}$ [mm]	404	C_u [kN]	311
$r_{a, max}$ [mm]	4	n_{th} [min^{-1}]	861
$r_{b, max}$ [mm]	4	n_g [min^{-1}]	2000