N28/630M3

Cylindrical Roller Bearings (single row, with cage)

Details:

Main dimensions			
d [mm]	630	d_1 [mm]	≈ 686.4
D [mm]	780	$r_{1,2}$ [mm]	4
B [mm]	88	$r_{3,4}$ [mm]	4
Weight [kg]	≈ 95	s [mm]	9.5
E [mm]	744		

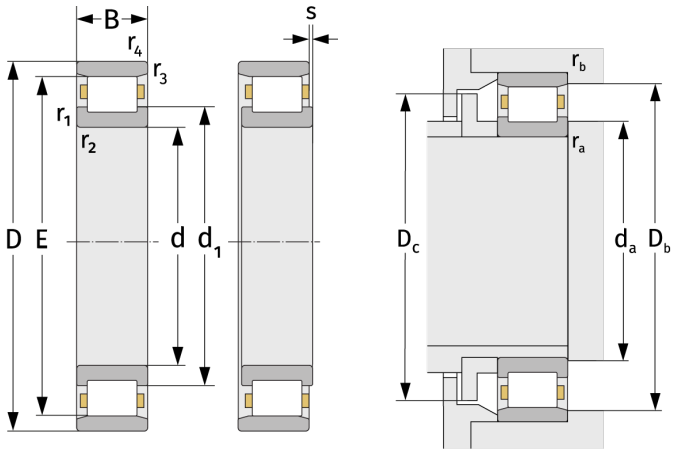

Mating dimensions		Calculation data	
$d_{a, min}$ [mm]	644.6	C [kN]	1730
$D_{b, min}$ [mm]	749	C_0 [kN]	4440
$D_{c, max}$ [mm]	739	C_u [kN]	345
$r_{a, max}$ [mm]	3	n_{th} [min^{-1}]	436
$r_{b, max}$ [mm]	3	n_g [min^{-1}]	840