N2852M3

Cylindrical Roller Bearings (single row, with cage)

Details:

Main dimensions			
d [mm]	260	d_1 [mm]	≈ 281.4
D [mm]	320	$r_{1,2}$ [mm]	2
B [mm]	36	$r_{3,4}$ [mm]	1.1
Weight [kg]	≈ 6	s [mm]	4.3
E [mm]	307		

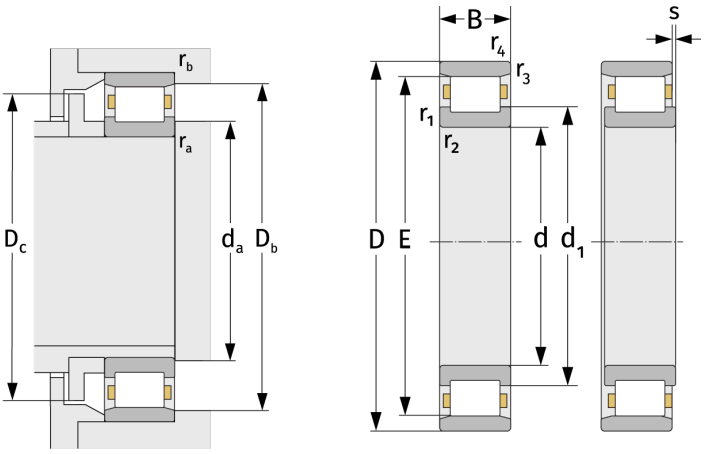

Mating dimensions		Calculation data	
$d_{a, min}$ [mm]	268.8	C [kN]	335
$D_{b, min}$ [mm]	310	C_0 [kN]	715
$D_{c, max}$ [mm]	304	C_u [kN]	71.6
$r_{a, max}$ [mm]	2	n_{th} [min^{-1}]	1437
$r_{b, max}$ [mm]	1	n_g [min^{-1}]	2400