N29/750E.M3

Cylindrical Roller Bearings (single row, with cage)

Details:

Main dimensions			
d [mm]	750	d_1 [mm]	≈ 840.6
D [mm]	1000	$r_{1,2}$ [mm]	6
B [mm]	145	$r_{3,4}$ [mm]	6
Weight [kg]	≈ 324	s [mm]	8.5
E [mm]	943		

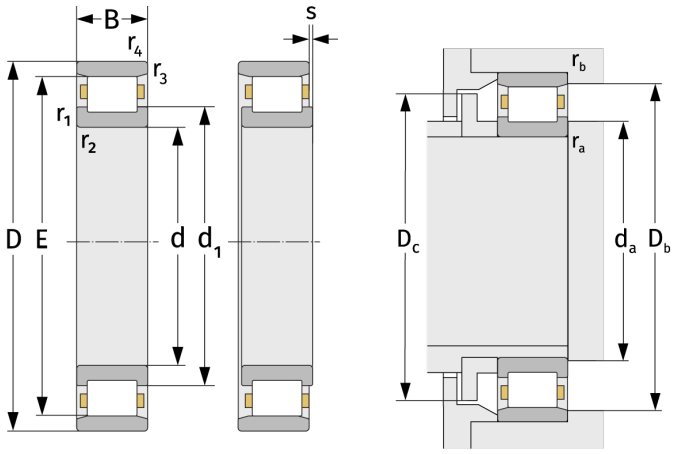

Mating dimensions		Calculation data	
$d_{a,\,min}$ [mm]	773	C [kN]	4020
$D_{b,\,min}$ [mm]	948	C_0 [kN]	9350
$D_{c,\,max}$ [mm]	938	C_u [kN]	682
$r_{a,\,max}$ [mm]	5	n_{th} [min^{-1}]	308
$r_{b,\,max}$ [mm]	5	n_g [min^{-1}]	630