N2918E.M3

Cylindrical Roller Bearings (single row, with cage)

Details:

Main dimensions			
d [mm]	90	d_1 [mm]	≈ 102.6
D [mm]	125	$r_{1,2}$ [mm]	1.1
B [mm]	22	$r_{3,4}$ [mm]	1
E [mm]	117	s [mm]	1.5

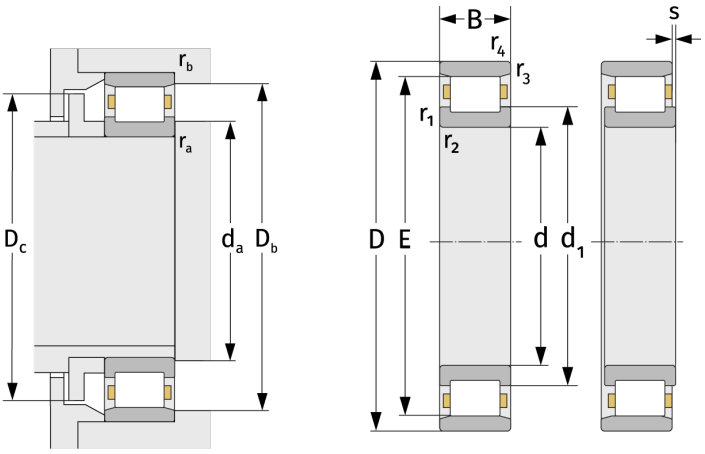

Mating dimensions		Calculation data	
$d_{a, min}$ [mm]	96	C [kN]	92.2
$D_{b, min}$ [mm]	118	C_0 [kN]	147
$D_{c, max}$ [mm]	115	C_u [kN]	19.5
$r_{a, max}$ [mm]	1	n_{th} [min^{-1}]	4018
$r_{b, max}$ [mm]	1	n_g [min^{-1}]	6800