N3020M3

Cylindrical Roller Bearings (single row, with cage)

Details:

Main dimensions			
d [mm]	100	d_1 [mm]	≈ 117.8
D [mm]	150	$r_{1,2}$ [mm]	1.5
B [mm]	37	$r_{3,4}$ [mm]	1.1
Weight [kg]	≈ 2	s [mm]	4
E [mm]	137		

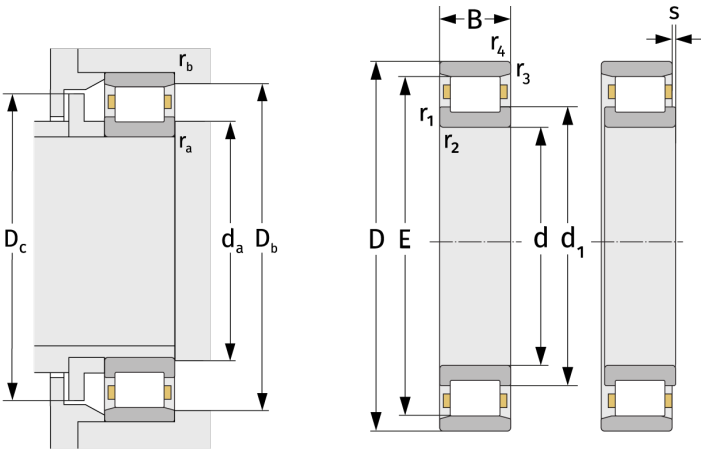

Mating dimensions		Calculation data	
$d_{a, min}$ [mm]	107	C [kN]	161
$D_{b, min}$ [mm]	139	C_0 [kN]	253
$D_{c, max}$ [mm]	135	C_u [kN]	32.3
$r_{a, max}$ [mm]	1.5	n_{th} [min^{-1}]	4118
$r_{b, max}$ [mm]	1	n_g [min^{-1}]	5800