N3040M3

Cylindrical Roller Bearings (single row, with cage)

Details:

Main dimensions			
d [mm]	200	d_1 [mm]	≈ 239.4
D [mm]	310	$r_{1,2}$ [mm]	2.1
B [mm]	82	$r_{3,4}$ [mm]	2.1
Weight [kg]	≈ 23	s [mm]	7.3
E [mm]	281		

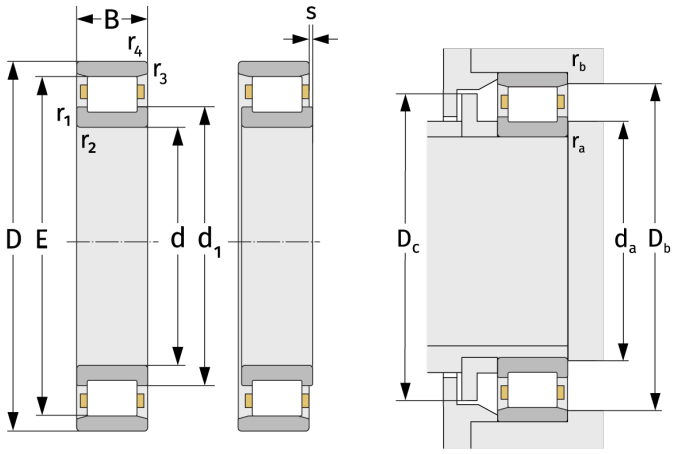

Mating dimensions		Calculation data	
$d_{a,\,min}$ [mm]	210.2	C [kN]	810
$D_{b,\,min}$ [mm]	285	C_0 [kN]	1480
$D_{c,\,max}$ [mm]	277	C_u [kN]	154
$r_{a,\,max}$ [mm]	2.1	n_{th} [min^{-1}]	1608
$r_{b,\,max}$ [mm]	2.1	n_g [min^{-1}]	2800