N31/560M3

Cylindrical Roller Bearings (single row, with cage)

Details:

Main dimensions			
d [mm]	560	d_1 [mm]	≈ 686
D [mm]	920	$r_{1,2}$ [mm]	7.5
B [mm]	280	$r_{3,4}$ [mm]	7.5
Weight [kg]	≈ 754	s [mm]	23
E [mm]	846		

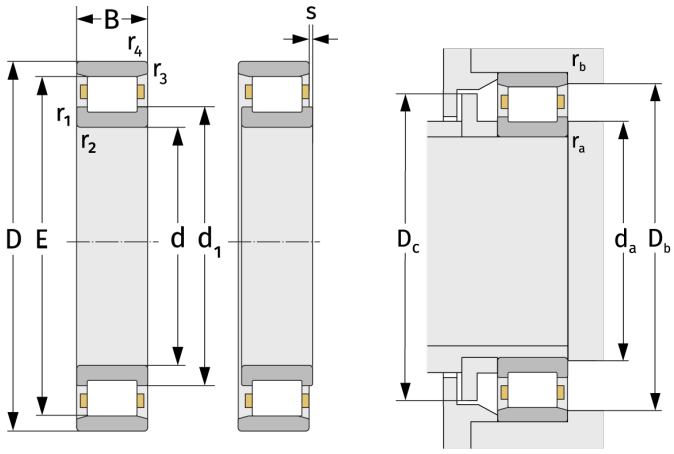

Mating dimensions		Calculation data	
$d_{a, min}$ [mm]	592	C [kN]	7750
$D_{b, min}$ [mm]	851	C_0 [kN]	14800
$D_{c, max}$ [mm]	841	C_u [kN]	1134
$r_{a, max}$ [mm]	6	n_{th} [min^{-1}]	299
$r_{b, max}$ [mm]	6	n_g [min^{-1}]	790