N31/600M3

Cylindrical Roller Bearings (single row, with cage)

Details:

Main dimensions			
d [mm]	600	d_1 [mm]	≈ 734
D [mm]	980	$r_{1,2}$ [mm]	7.5
B [mm]	300	$r_{3,4}$ [mm]	7.5
Weight [kg]	≈ 903	s [mm]	26
E [mm]	902		

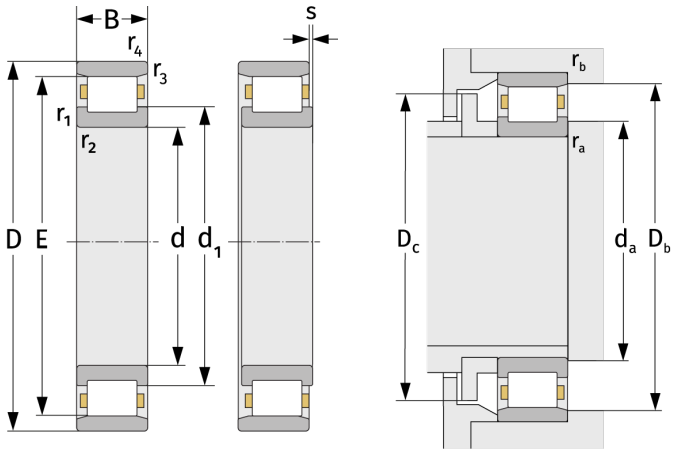

Mating dimensions		Calculation data	
$d_{a, min}$ [mm]	632	C [kN]	8450
$D_{b, min}$ [mm]	907	C_0 [kN]	16400
$D_{c, max}$ [mm]	897	C_u [kN]	1232
$r_{a, max}$ [mm]	6	n_{th} [min^{-1}]	277
$r_{b, max}$ [mm]	6	n_g [min^{-1}]	720