N3134M3

Cylindrical Roller Bearings (single row, with cage)

Details:

Main dimensions			
d [mm]	170	d_1 [mm]	≈ 209
D [mm]	280	$r_{1,2}$ [mm]	2.1
B [mm]	88	$r_{3,4}$ [mm]	2.1
Weight [kg]	≈ 21	s [mm]	8.5
E [mm]	257		

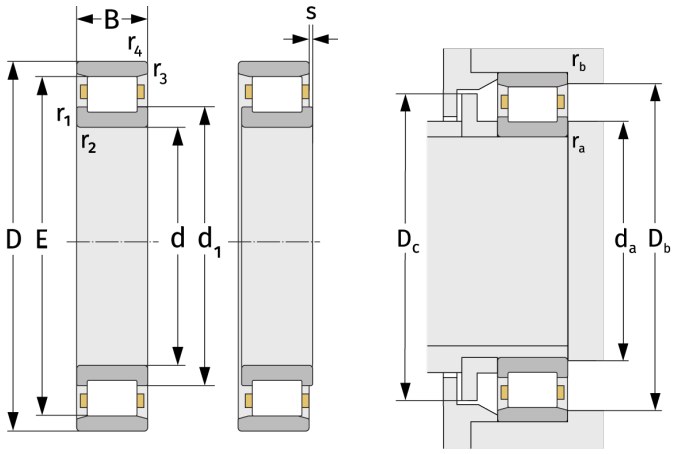

Mating dimensions		Calculation data	
$d_{a,\,min}$ [mm]	182	C [kN]	830
$D_{b,\,min}$ [mm]	260	C_0 [kN]	1330
$D_{c,\,max}$ [mm]	254	C_u [kN]	143
$r_{a,\,max}$ [mm]	2.1	n_{th} [min^{-1}]	1774
$r_{b,\,max}$ [mm]	2.1	n_g [min^{-1}]	3100