N330E.M3

Cylindrical Roller Bearings (single row, with cage)

Details:

Main dimensions			
d [mm]	150	d_1 [mm]	≈ 211
D [mm]	320	$r_{1,2}$ [mm]	4
B [mm]	65	$r_{3,4}$ [mm]	4
Weight [kg]	≈ 26	s [mm]	4.5
E [mm]	283		

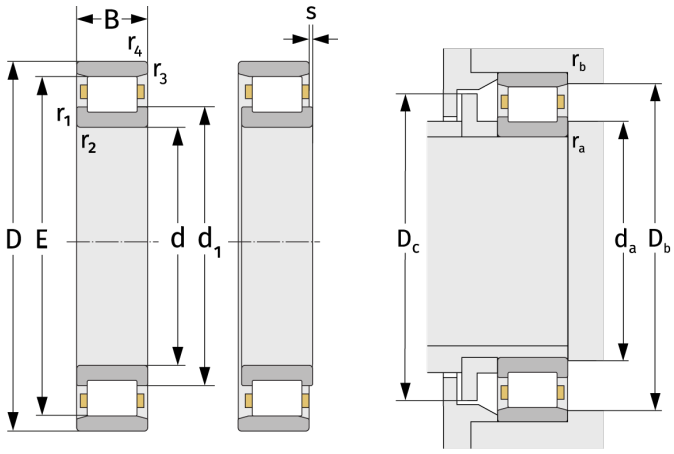

Mating dimensions		Calculation data	
$d_{a,\,min}$ [mm]	167	C [kN]	775
$D_{b,\,min}$ [mm]	286	C_0 [kN]	945
$D_{c,\,max}$ [mm]	281	C_u [kN]	100
$r_{a,\,max}$ [mm]	3	n_{th} [min^{-1}]	1955
$r_{b,\,max}$ [mm]	3	n_g [min^{-1}]	3000