N39/560E.M3

Cylindrical Roller Bearings (single row, with cage)

Details:

Main dimensions			
d [mm]	560	d_1 [mm]	≈ 628
D [mm]	750	$r_{1,2}$ [mm]	5
B [mm]	140	$r_{3,4}$ [mm]	5
Weight [kg]	≈ 178	s [mm]	7.4
E [mm]	708		

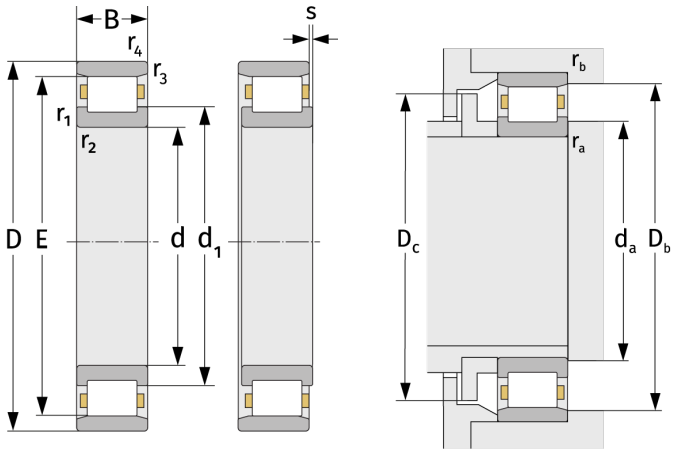

Mating dimensions		Calculation data	
$d_{a,\,min}$ [mm]	578	C [kN]	3000
$D_{b,\,min}$ [mm]	712	C_0 [kN]	6950
$D_{c,\,max}$ [mm]	704	C_u [kN]	549
$r_{a,\,max}$ [mm]	4	n_{th} [min^{-1}]	403
$r_{b,\,max}$ [mm]	4	n_g [min^{-1}]	920