N3919E.M3

Cylindrical Roller Bearings (single row, with cage)

Details:

Main dimensions			
d [mm]	95	d_1 [mm]	≈ 107.6
D [mm]	130	$r_{1,2}$ [mm]	1.1
B [mm]	26	$r_{3,4}$ [mm]	1
Weight [kg]	≈ 1	s [mm]	1.5
E [mm]	122		

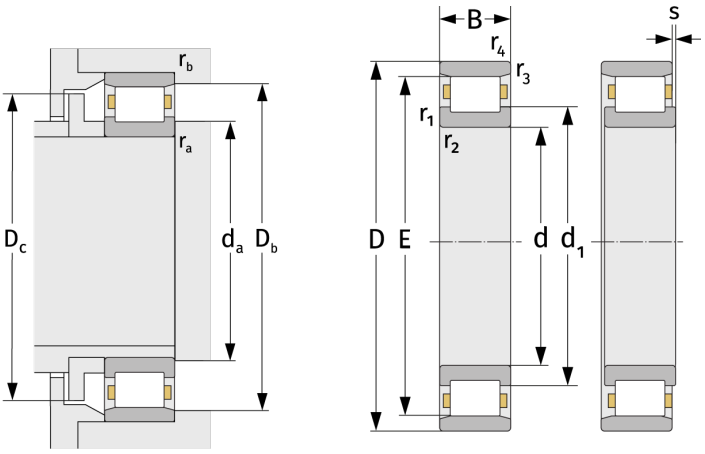

Mating dimensions		Calculation data	
$d_{a, min}$ [mm]	101	C [kN]	119
$D_{b, min}$ [mm]	123	C_0 [kN]	205
$D_{c, max}$ [mm]	120	C_u [kN]	26.9
$r_{a, max}$ [mm]	1	n_{th} [min^{-1}]	3697
$r_{b, max}$ [mm]	1	n_g [min^{-1}]	6500