N434M3

Cylindrical Roller Bearings (single row, with cage)

Details:

Main dimensions			
d [mm]	170	d_1 [mm]	≈ 261.4
D [mm]	420	$r_{1,2}$ [mm]	5
B [mm]	92	$r_{3,4}$ [mm]	5
Weight [kg]	≈ 68	s [mm]	4.8
E [mm]	351		

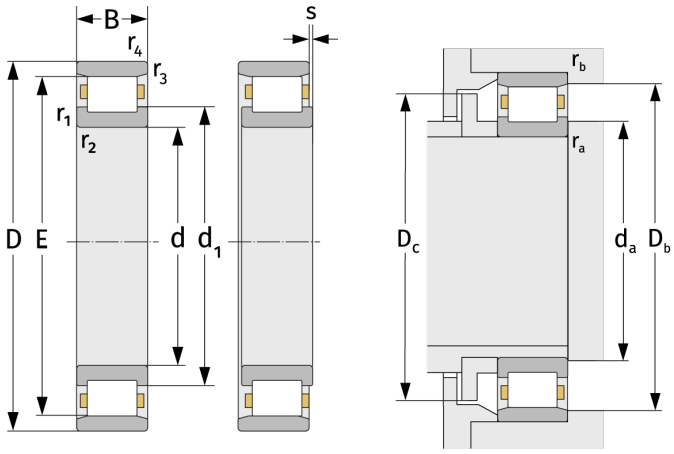

Mating dimensions		Calculation data	
$d_{a,\,min}$ [mm]	194	C [kN]	1180
$D_{b,\,min}$ [mm]	354	C_0 [kN]	1490
$D_{c,\,max}$ [mm]	347	C_u [kN]	148
$r_{a,\,max}$ [mm]	4	n_{th} [min^{-1}]	1415
$r_{b,\,max}$ [mm]	4	n_g [min^{-1}]	2400