NCF3020V

Cylindrical Roller Bearings (full complement, single row)

Details:

Main dimensions			
d [mm]	100	d_1 [mm]	≈ 115.7
D [mm]	150	D_1 [mm]	≈ 133.65
B [mm]	37	$r_{1,2}$ [mm]	1.5
Weight [kg]	≈ 2.14	$r_{3,4}$ [mm]	1.1
E [mm]	139.65	s [mm]	4

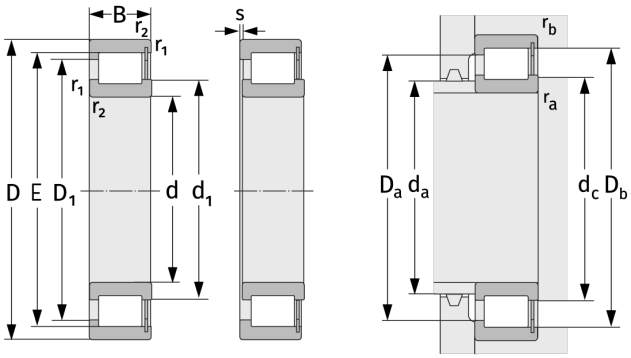

Mating dimensions		Calculation data	
$d_{a,\,min}$ [mm]	107	C [kN]	213
$d_{c,\,min}$ [mm]	114	C_0 [kN]	314
$D_{a,\,max}$ [mm]	143	C_u [kN]	40.2
$D_{b,\,max}$ [mm]	143	n_{th} [min^{-1}]	2002
$r_{a,\,max}$ [mm]	1.5	n_g [min^{-1}]	2700
$r_{b,\,max}$ [mm]	1		