NNCF4832V

Cylindrical Roller Bearings (full complement, double row)

Details:

Main dimensions			
d [mm]	160	d_s [mm]	3.2
D [mm]	200	n_s [mm]	6.5
B [mm]	40	$r_{1,2}$ [mm]	1.1
Weight [kg]	≈ 2.95	$r_{3,4}$ [mm]	1.1
d_1 [mm]	≈ 172.5	s [mm]	2
D_1 [mm]	≈ 183.3		

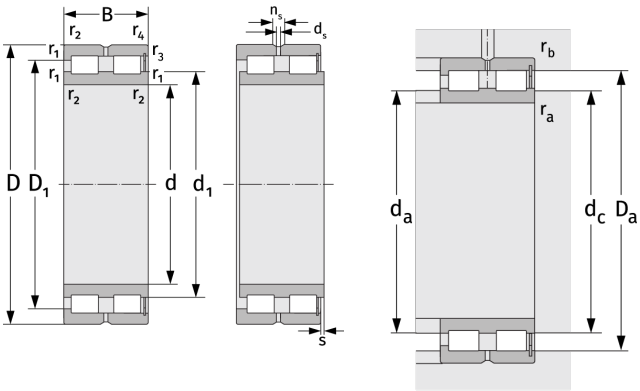

Mating dimensions		Calculation data	
$d_{a, min}$ [mm]	166	C [kN]	242
$d_{c, empf}$ [mm]	171	C_0 [kN]	610
$D_{a, max}$ [mm]	194	C_u [kN]	70.5
$r_{a, max}$ [mm]	1	n_{th} [min^{-1}]	1149
$r_{b, max}$ [mm]	1	n_g [min^{-1}]	1900