NNCF4914V

Cylindrical Roller Bearings (full complement, double row)

Details:

Main dimensions			
d [mm]	70	d_s [mm]	3.2
D [mm]	100	n_s [mm]	4.8
B [mm]	30	$r_{1,2}$ [mm]	1
Weight [kg]	≈ 0.769	$r_{3,4}$ [mm]	1
d_1 [mm]	≈ 80.67	s [mm]	1
D_1 [mm]	≈ 89.07		

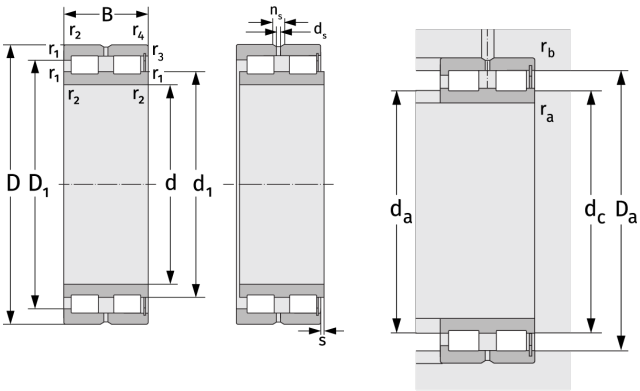

Mating dimensions		Calculation data	
$d_{a,\,min}$ [mm]	74.6	C [kN]	108
$d_{c,\,empf}$ [mm]	80	C_0 [kN]	198
$D_{a,\,max}$ [mm]	95.4	C_u [kN]	26
$r_{a,\,max}$ [mm]	1	n_{th} [min^{-1}]	2278
$r_{b,\,max}$ [mm]	1	n_g [min^{-1}]	4000