NNCF4936V

Cylindrical Roller Bearings (full complement, double row)

Details:

Main dimensions			
d [mm]	180	d_s [mm]	4.8
D [mm]	250	n_s [mm]	9.5
B [mm]	69	$r_{1,2}$ [mm]	2
Weight [kg]	≈ 10.6	$r_{3,4}$ [mm]	2
d_1 [mm]	≈ 204.9	s [mm]	4
D_1 [mm]	≈ 224.1		

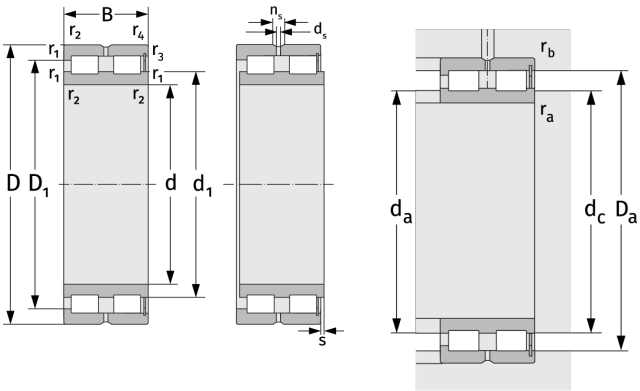

Mating dimensions		Calculation data	
$d_{a,\,min}$ [mm]	188.8	C [kN]	560
$d_{c,\,empf}$ [mm]	203	C_0 [kN]	1250
$D_{a,\,max}$ [mm]	241.2	C_u [kN]	137
$r_{a,\,max}$ [mm]	2	n_{th} [min^{-1}]	905
$r_{b,\,max}$ [mm]	2	n_g [min^{-1}]	1500