NNCF5032V

Cylindrical Roller Bearings (full complement, double row)

Details:

Main dimensions			
d [mm]	160	d_s [mm]	4.8
D [mm]	240	n_s [mm]	9.5
B [mm]	109	$r_{1,2}$ [mm]	2.1
Weight [kg]	≈ 16.1	$r_{3,4}$ [mm]	1.1
d_1 [mm]	≈ 184.8	s [mm]	6
D_1 [mm]	≈ 214.8		

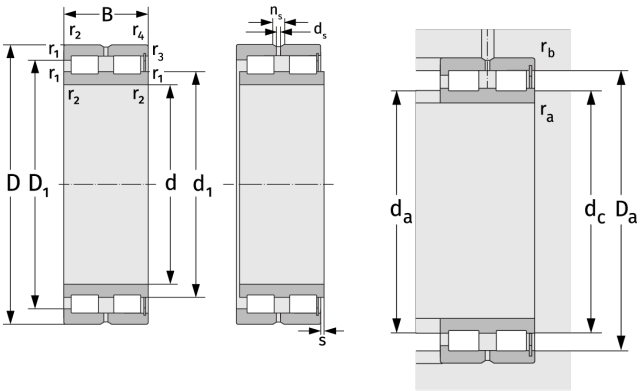

Mating dimensions		Calculation data	
$d_{a, min}$ [mm]	170.2	C [kN]	915
$d_{c, empf}$ [mm]	183	C_0 [kN]	1660
$D_{a, max}$ [mm]	229.8	C_u [kN]	186
$r_{a, max}$ [mm]	2.1	n_{th} [min^{-1}]	1017
$r_{b, max}$ [mm]	1	n_g [min^{-1}]	1600