NNCF5044V

Cylindrical Roller Bearings (full complement, double row)

Details:

Main dimensions			
d [mm]	220	d_s [mm]	4.8
D [mm]	340	n_s [mm]	9.5
B [mm]	160	$r_{1,2}$ [mm]	3
Weight [kg]	≈ 51.8	$r_{3,4}$ [mm]	3
d_1 [mm]	≈ 254.6	s [mm]	9
D_1 [mm]	≈ 297.8		

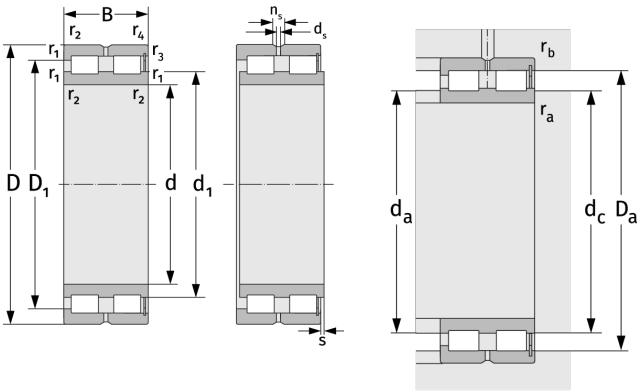

Mating dimensions		Calculation data	
$d_{a,\,min}$ [mm]	232.4	C [kN]	1910
$d_{c,\,empf}$ [mm]	252	C_0 [kN]	3680
$D_{a,\,max}$ [mm]	327.6	C_u [kN]	375
$r_{a,\,max}$ [mm]	2.5	n_{th} [min^{-1}]	611
$r_{b,\,max}$ [mm]	2.5	n_g [min^{-1}]	1200