NNCF5052V

Cylindrical Roller Bearings (full complement, double row)

Details:

Main dimensions			
d [mm]	260	d_s [mm]	4.8
D [mm]	400	n_s [mm]	9.5
B [mm]	190	$r_{1,2}$ [mm]	4
Weight [kg]	≈ 82.1	$r_{3,4}$ [mm]	4
d_1 [mm]	≈ 304	s [mm]	10
D_1 [mm]	≈ 358		

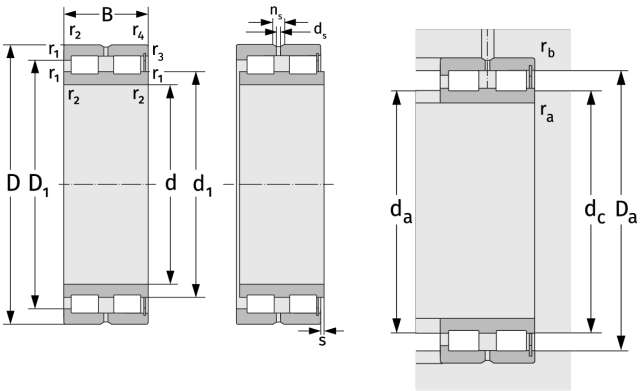

Mating dimensions		Calculation data	
$d_{a,\,min}$ [mm]	274.6	C [kN]	2670
$d_{c,\,empf}$ [mm]	301	C_0 [kN]	5150
$D_{a,\,max}$ [mm]	385.4	C_u [kN]	498
$r_{a,\,max}$ [mm]	3	n_{th} [min^{-1}]	485
$r_{b,\,max}$ [mm]	3	n_g [min^{-1}]	930