NNCF5056V

Cylindrical Roller Bearings (full complement, double row)

Details:

Main dimensions			
d [mm]	280	d_s [mm]	4.8
D [mm]	420	n_s [mm]	9.5
B [mm]	190	$r_{1,2}$ [mm]	4
Weight [kg]	≈ 89.2	$r_{3,4}$ [mm]	4
d_1 [mm]	≈ 323.8	s [mm]	10
D_1 [mm]	≈ 374.2		

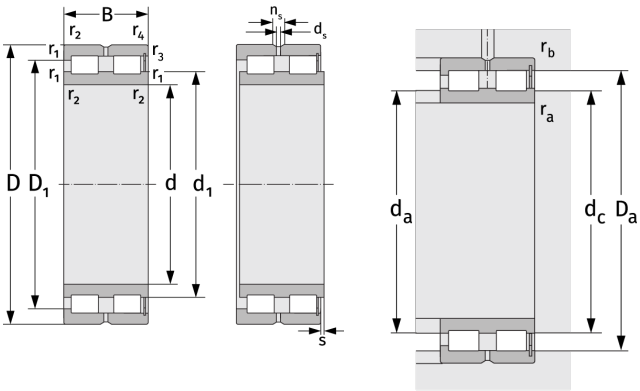

Mating dimensions		Calculation data	
$d_{a,\,min}$ [mm]	294.6	C [kN]	2700
$d_{c,\,empf}$ [mm]	321	C_0 [kN]	5550
$D_{a,\,max}$ [mm]	405.4	C_u [kN]	529
$r_{a,\,max}$ [mm]	3	n_{th} [min^{-1}]	441
$r_{b,\,max}$ [mm]	3	n_g [min^{-1}]	880