NNU6010V

Cylindrical Roller Bearings (full complement, multi row)

Details:

Main dimensions			
d [mm]	50	d_s [mm]	3.2
D [mm]	80	n_s [mm]	4.8
B [mm]	54	$r_{1,2}$ [mm]	1
Weight [kg]	≈ 1.15	$r_{3,4}$ [mm]	1
D_1 [mm]	≈ 69		

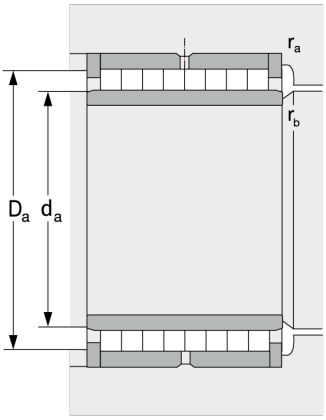

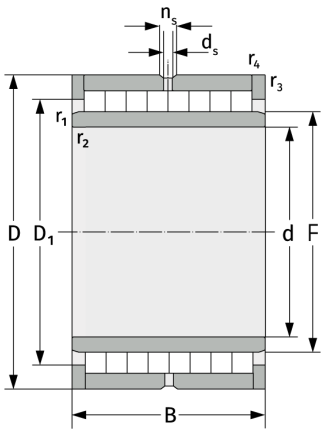

Mating dimensions		Calculation data	
$d_{a,\,min}$ [mm]	55	C [kN]	161
$D_{a,\,max}$ [mm]	75	C_0 [kN]	340
$r_{a,\,max}$ [mm]	1	C_u [kN]	44.7
$r_{b,\,max}$ [mm]	1		