NNU6064M

Cylindrical Roller Bearings (multi row, with cage)

Details:

Main dimensions			
d [mm]	320	d_s [mm]	4.8
D [mm]	480	n_s [mm]	9.5
B [mm]	290	$r_{1,2}$ [mm]	4
Weight [kg]	≈ 194	$r_{3,4}$ [mm]	4
F [mm]	367	s [mm]	9
D_1 [mm]	≈ 418.2		

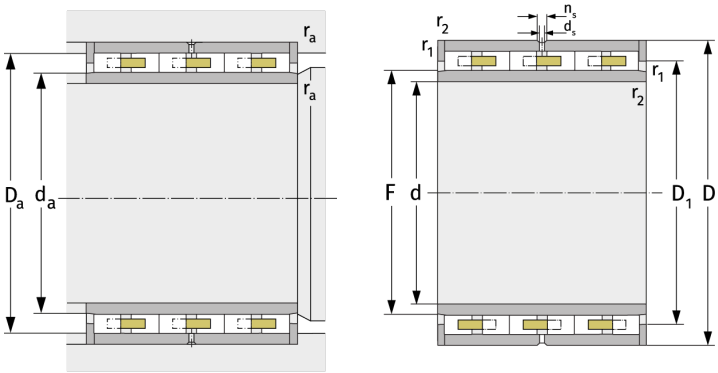

Mating dimensions		Calculation data	
$d_{a,\,min}$ [mm]	365	C [kN]	2830
$D_{a,\,max}$ [mm]	465	C_0 [kN]	7500
$r_{a,\,max}$ [mm]	3	C_u [kN]	688
$r_{b,\,max}$ [mm]	3	n_g [min^{-1}]	1400