NNU6960V

Cylindrical Roller Bearings (full complement, multi row)

Details:

Main dimensions			
d [mm]	300	d_s [mm]	4.8
D [mm]	420	n_s [mm]	9.5
B [mm]	218	$r_{1,2}$ [mm]	3
Weight [kg]	≈ 103	$r_{3,4}$ [mm]	3
D_1 [mm]	≈ 374.9		

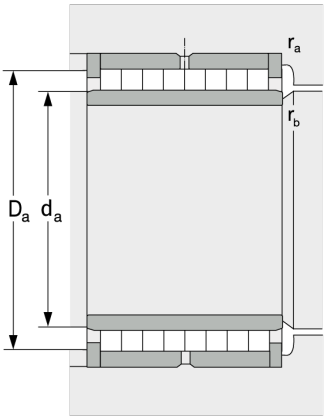

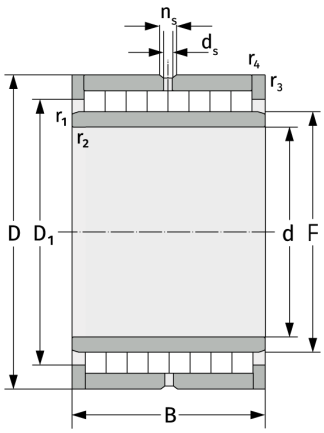

Mating dimensions		Calculation data	
$d_{a,\,min}$ [mm]	312	C [kN]	2670
$D_{a,\,max}$ [mm]	408	C_0 [kN]	8350
$r_{a,\,max}$ [mm]	2.5	C_u [kN]	788
$r_{b,\,max}$ [mm]	2.5		