# NNU6976V

Cylindrical Roller Bearings (full complement, multi row)

## Details:

| Main dimensions | | | |
|---|---|---|---|
| d [mm] | 380 | $d_s$ [mm] | 6.3 |
| D [mm] | 520 | $n_s$ [mm] | 12.2 |
| B [mm] | 250 | $r_{1,2}$ [mm] | 4 |
| Weight [kg] | ≈ 173 | $r_{3,4}$ [mm] | 4 |
| $D_1$ [mm] | ≈ 464 | | |

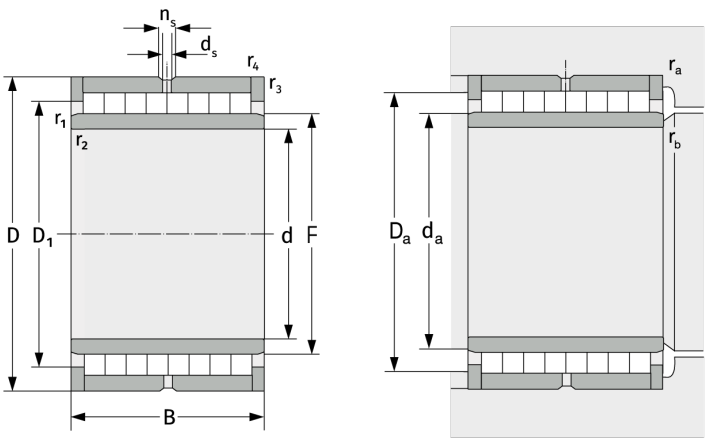


| Mating dimensions | | Calculation data | |
|---|---|---|---|
| $d_{a,\,min}$ [mm] | 395 | C [kN] | 3660 |
| $D_{a,\,max}$ [mm] | 505 | $C_0$ [kN] | 12100 |
| $r_{a,\,max}$ [mm] | 3 | $C_u$ [kN] | 1074 |
| $r_{b,\,max}$ [mm] | 3 | | |