NNU6980V

Cylindrical Roller Bearings (full complement, multi row)

Details:

Main dimensions			
d [mm]	400	d_s [mm]	6.3
D [mm]	540	n_s [mm]	12.2
B [mm]	250	$r_{1,2}$ [mm]	4
Weight [kg]	≈ 180	$r_{3,4}$ [mm]	4
D_1 [mm]	≈ 490.7		

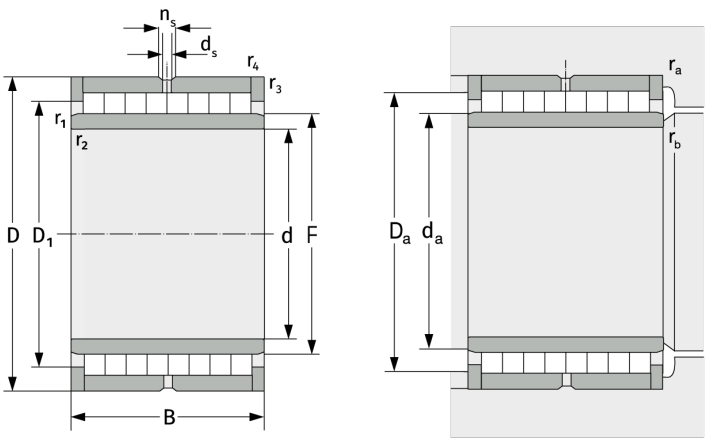

Mating dimensions		Calculation data	
$d_{a,\,min}$ [mm]	415	C [kN]	3780
$D_{a,\,max}$ [mm]	525	C_0 [kN]	12800
$r_{a,\,max}$ [mm]	3	C_u [kN]	1118
$r_{b,\,max}$ [mm]	3		