# HM30/530

Grooved Nuts

## Details:

| Main dimensions | | | |
|---|---|---|---|
| Weight [kg] | ≈ 42.8 | B [mm] | 68 |
| G [mm] | Tr530x 6 | b [mm] | 40 |
| | | h [mm] | 20 |
| $d_1$ [mm] | 590 | | |
| $d_2$ [mm] | 630 | | |

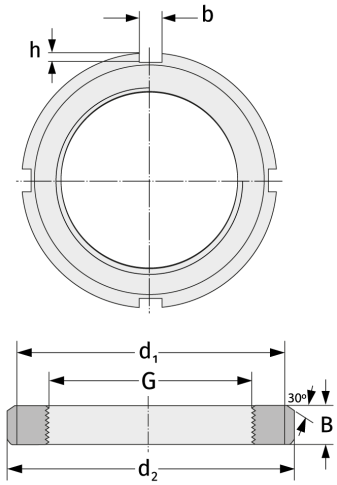


| Mating dimensions | | Containing components | |
|---|---|---|---|
| | | Securing | MS30/530 |