# HM3048

Nutmuttern

## Details:

| Hauptabmessungen | | | |
|---|---|---|---|
| Gewicht [kg] | ≈ 5,16 | B [mm] | 34 |
| | | b [mm] | 20 |
| G [mm] | Tr240x4 | h [mm] | 10 |
| $d_1$ [mm] | 270 | | |
| $d_2$ [mm] | 290 | | |

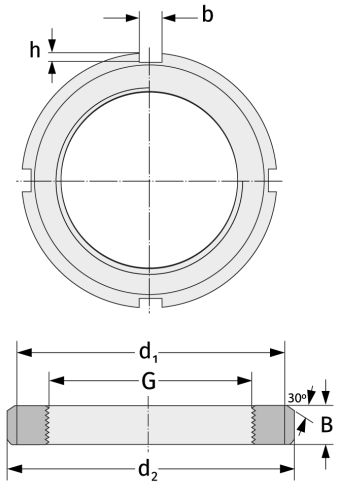


| Anschlussmaße | Enthaltene Komponenten | |
|---|---|---|
| | Sicherung | MS3048 |