# NNCF48/530V

Zylinderrollenlager (zweireihig, vollrollig)

## Details:

| Hauptabmessungen | | | |
|---|---|---|---|
| d [mm] | 530 | $d_s$ [mm] | 8 |
| D [mm] | 650 | $n_s$ [mm] | 15 |
| B [mm] | 118 | $r_{1,2}$ [mm] | 3 |
| Gewicht [kg] | ≈ 86,3 | $r_{3,4}$ [mm] | 3 |
| | | s [mm] | 7 |
| $d_1$ [mm] | ≈ 575 | | |
| $D_1$ [mm] | ≈ 605 | | |

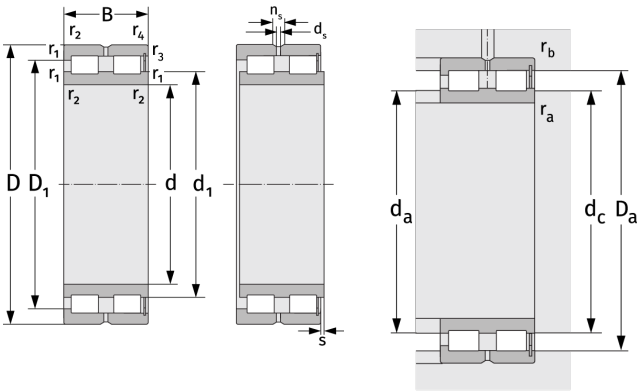


| Anschlussmaße | | Berechnungsdaten | |
|---|---|---|---|
| $d_{a, min}$ [mm] | 542,4 | C [kN] | 1850 |
| $d_{c, empf}$ [mm] | 569 | $C_0$ [kN] | 6000 |
| $D_{a, max}$ [mm] | 637,6 | $C_u$ [kN] | 492 |
| $r_{a, max}$ [mm] | 2,5 | $n_{th}$ [$min^{-1}$] | 238 |
| $r_{b, max}$ [mm] | 2,5 | $n_g$ [$min^{-1}$] | 480 |