# NNCF4836V

Zylinderrollenlager (zweireihig, vollrollig)

## Details:

| Hauptabmessungen | | | |
|---|---|---|---|
| d [mm] | 180 | $d_s$ [mm] | 3,2 |
| D [mm] | 225 | $n_s$ [mm] | 6,5 |
| B [mm] | 45 | $r_{1,2}$ [mm] | 1,1 |
| Gewicht [kg] | ≈ 4,11 | $r_{3,4}$ [mm] | 1,1 |
| | | s [mm] | 3 |
| $d_1$ [mm] | ≈ 198,1 | | |
| $D_1$ [mm] | ≈ 210,1 | | |

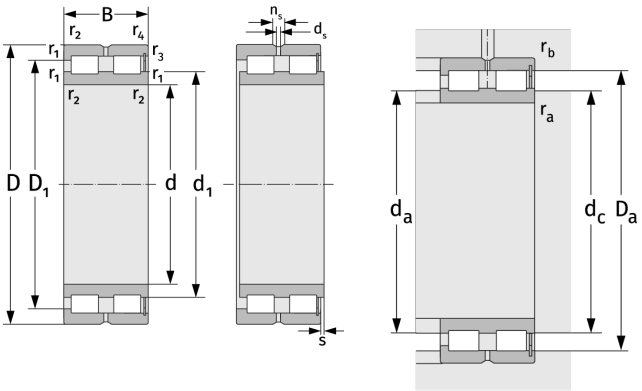


| Anschlussmaße | | Berechnungsdaten | |
|---|---|---|---|
| $d_{a, min}$ [mm] | 186 | C [kN] | 276 |
| $d_{c, empf}$ [mm] | 196 | $C_0$ [kN] | 700 |
| $D_{a, max}$ [mm] | 219 | $C_u$ [kN] | 77,8 |
| $r_{a, max}$ [mm] | 1 | $n_{th}$ [$min^{-1}$] | 1053 |
| $r_{b, max}$ [mm] | 1 | $n_g$ [$min^{-1}$] | 1600 |