NNU6088V

Zylinderrollenlager (mehrreihig, vollrollig)

Details:

Hauptabmessungen			
d [mm]	440	d_s [mm]	8
D [mm]	650	n_s [mm]	15
B [mm]	375	$r_{1,2}$ [mm]	6
Gewicht [kg]	≈ 470	$r_{3,4}$ [mm]	6
D_1 [mm]	≈ 576,2		

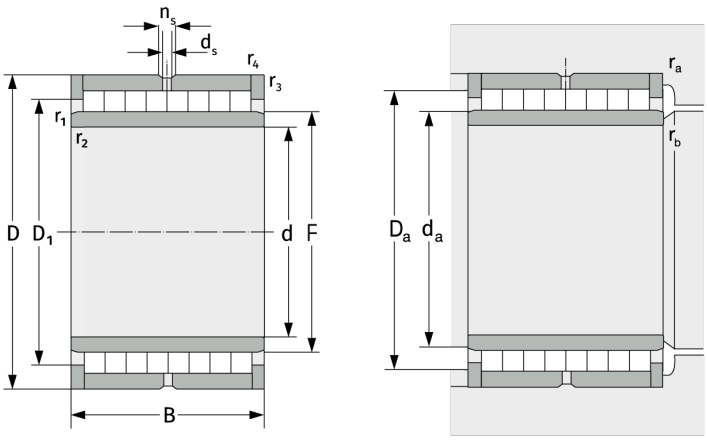

Anschlussmaße		Berechnungsdaten	
$d_{a,\,min}$ [mm]	463	C [kN]	7050
$D_{a,\,max}$ [mm]	627	C_0 [kN]	22200
$r_{a,\,max}$ [mm]	5	C_u [kN]	1857
$r_{b,\,max}$ [mm]	5		